Analysis of Feedback Systems – Internal Stability

(反馈系统分析 – 内部稳定性)

Two-DOF Closed-Loop System

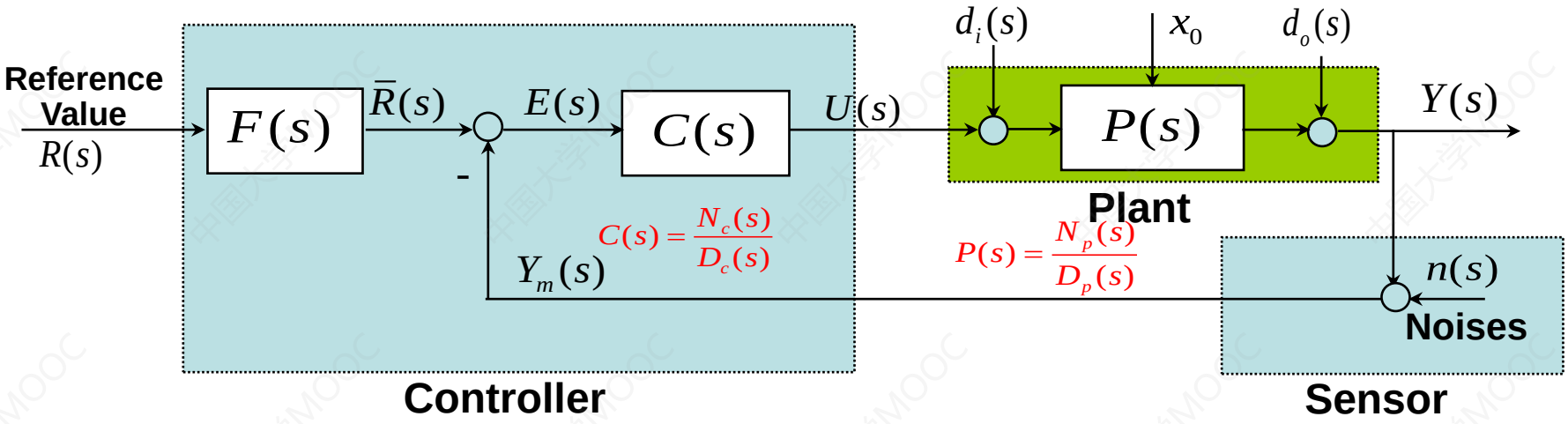

$$U(s)=C(s)E(s)=C(s)[\bar{R}(s)-Y_m(s)]=C(s)\{F(s)R(s)-[Y(s)+n(s)]\}$$

$$Y(s)=d_0+P(s)[U(s)+d_i]+\frac{f(s,x_0)}{D_p(s)}$$

$$=d_0+P(s)C(s)F(s)R(s)-P(s)C(s)Y(s)-P(s)C(s)n(s)+P(s)d_i+\frac{f(s,x_0)}{D_p(s)}$$

$$\Rightarrow\quad [1+P(s)C(s)]Y(s)=d_0(s)+P(s)C(s)F(s)R(s)-P(s)C(s)n(s)+P(s)d_i(s)+\frac{f(s,x_0)}{D_p(s)}$$

Closed-Loop Transfer Functions

$$Y(s)=\underbrace{\frac{P(s)C(s)F(s)}{1+P(s)C(s)}}_{G_{YR}(s)}R(s)+\underbrace{\frac{1}{1+P(s)C(s)}}_{G_{Yd0}(s)}[d_0+\frac{f(s,x_0)}{D_p(s)}]$$

$$+\underbrace{\frac{P(s)}{1+P(s)C(s)}}_{G_{Ydi}(s)}d_i(s)+\underbrace{\frac{-P(s)C(s)}{1+P(s)C(s)}}_{G_{Yn}(s)}n(s)$$

$$U(s)=\frac{C(s)F(s)}{1+P(s)C(s)}R(s)+\frac{-C(s)}{1+P(s)C(s)}[d_0+\frac{f(s,x_0)}{D_p(s)}]$$

$$+\frac{-P(s)C(s)}{1+P(s)C(s)}d_i(s)+\frac{-C(s)}{1+P(s)C(s)}n(s)$$

Sensitivity Functions

$$Y(s)=T(s)F(s)R(s)+S(s)[d_0+\frac{f(s,x_0)}{D_p(s)}]+S_i(s)d_i(s)-T(s)n(s)$$

$$U(s)=S_u(s)[F(s)R(s)-d_0(s)-\frac{f(s,x_0)}{D_p(s)}-P(s)d_i(s)-n(s)]$$

$$T(s)=\frac{P(s)C(s)}{1+P(s)C(s)}=\frac{N_p(s)N_c(s)}{D_p(s)D_c(s)+N_p(s)N_c(s)}:$$ **Complementary sensitivity function (互补灵敏度函数)**

$$S(s)=\frac{1}{1+P(s)C(s)}=\frac{D_p(s)D_c(s)}{D_p(s)D_c(s)+N_p(s)N_c(s)}:$$ **Sensitivity function (灵敏度函数)**

$$S_i(s)=\frac{P(s)}{1+P(s)C(s)}=\frac{N_p(s)D_c(s)}{D_p(s)D_c(s)+N_p(s)N_c(s)}:$$ **Input disturbance sensitivity function (输入干扰灵敏度函数)**

$$S_u(s)=\frac{C(s)}{1+P(s)C(s)}=\frac{D_p(s)N_c(s)}{D_p(s)D_c(s)+N_p(s)N_c(s)}:$$ **Control sensitivity function (控制灵敏度函数)**

Design Trade-off of Sensitivity Functions

- **Relationship Between Sensitivities** (灵敏度之间关系)

$$S(s)+T(s)=1$$

$$S_i(s)=S(s)P(s)$$

$$S_u(s)=S(s)C(s)$$

- **Practical Implications** (实际意义)

To minimize the effect of noise :(为了最小化噪声影响)

Want (希望)**:** $T(s)=0$

To minimize disturbance effect :(为了最小化干扰影响)

Want (希望)**:** $S(s)=0$

To follow reference :(为了跟踪参考量)

Want (希望)**:** $T(s)F(s)=1$

Internal Stability

- **Definition** (定义)
  - A system is internally stable if and only if (iff) all closed-loop transfer functions (CLTF) in the output and control input are stable, i.e., all four sensitivity functions are stable (系统内部稳定的充分必要条件是闭环系统的输出和控制量输入的传递函数都是稳定的,也就是四个灵敏度函数是稳定的)

$$\begin{bmatrix} Y(s) \\ U(s) \end{bmatrix} = \begin{bmatrix} T(s) & S_i(s) & S(s) & -T(s) \\ S_u(s) & -S_u(s)P(s) & -S_u(s) & -S_u(s) \end{bmatrix} \begin{bmatrix} F(s)R(s) \\ d_i(s) \\ d_o(s) \\ n(s) \end{bmatrix} + \begin{bmatrix} \dfrac{D_c f(s,x_0)}{D_p D_c + N_p N_c} \\ \dfrac{-N_c f(s,x_0)}{D_p D_c + N_p N_c} \end{bmatrix}$$

- **Link to Characteristic Equation** (与特征方程的联系)
  - A two-DOF closed-loop system is internally stable iff the roots of the closed-loop characteristic equation (CLCE) (2自由度闭环系统是内部稳定的当且仅当闭环系统的特征方程的根)

$$D_p(s)D_c(s) + N_p(s)N_c(s) = 0$$

all lie in the open left half plane (都在左半平面上).

$D_p(s)D_c(s) + N_p(s)N_c(s)$ is called closed-loop characteristic polynomial (CLCP) (被称作闭环特征多项式)

Internal Stability

- **Remark (注意)**

Internal stability is more than the stability of the transfer function from reference input to output; it requires that there be no cancellation of unstable poles between controller and the plant ! (内部稳定性比从参考输入到输出的传递函数的稳定性更严格，它要求控制器和系统没有零极点相消)

Ex:

$$P(s)=\frac{3}{-s+1},\qquad C(s)=\frac{-s+1}{s}$$

$\Rightarrow$

$$G_{YR}(s)=\frac{3F(s)}{s+3}$$

$$T(s)=G_{YR}(s)=\frac{P(s)C(s)F(s)}{1+P(s)C(s)}$$

but

$$S_i(s)=\frac{3s}{(s+3)(-s+1)}$$

$$S_i(s)=\frac{P(s)}{1+P(s)C(s)}$$

$$S(s)=\frac{1}{1+P(s)C(s)}$$

Summary

- **Typical Classical Feedback Controller Structure** (典型传统反馈控制器结构)
- **Nominal Sensitivity Functions** (名义灵敏度函数)
- **Stability of Nominal Feedback System** (名义反馈系统的稳定性)
  - Internal Stability (内部稳定)